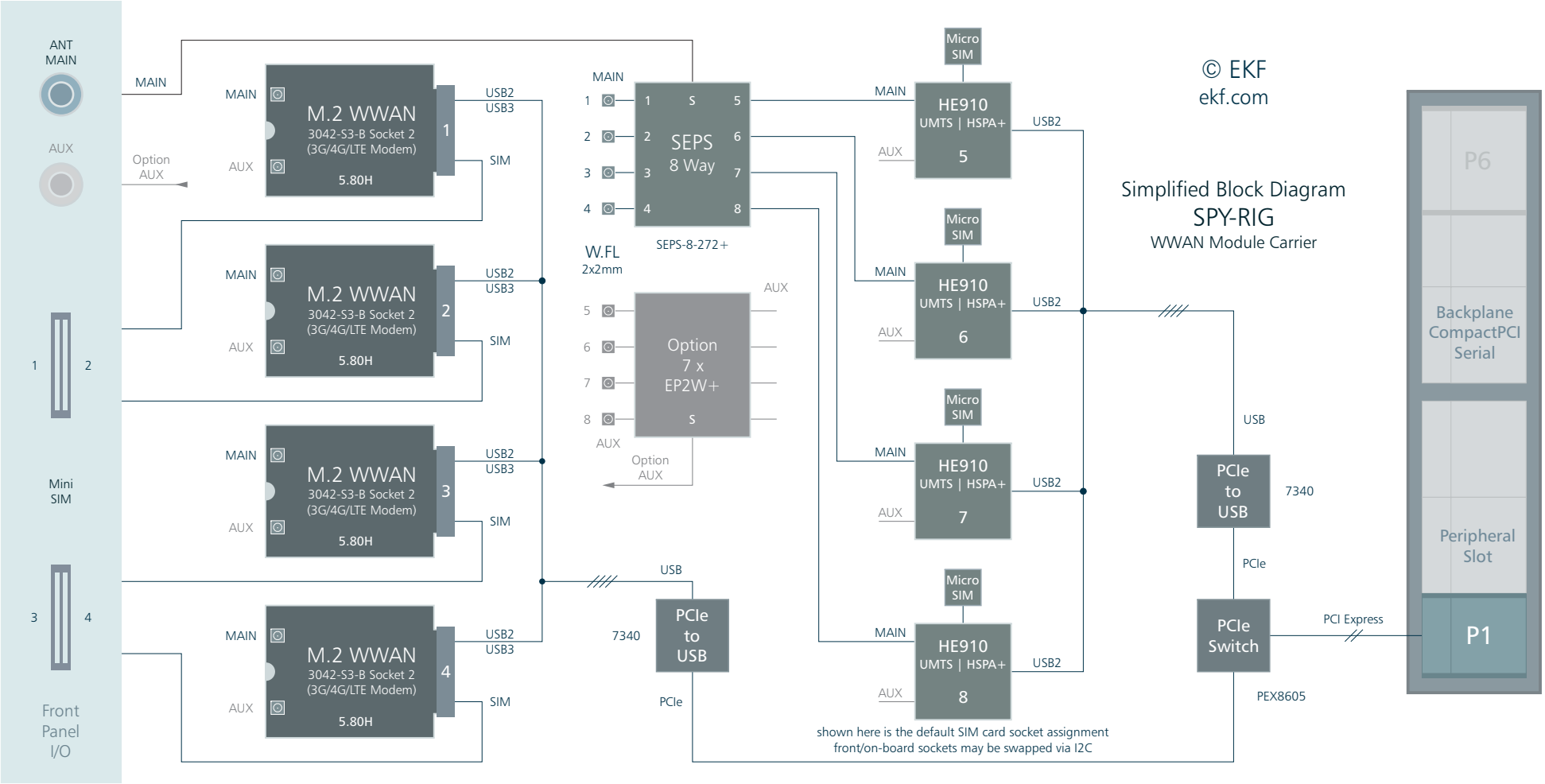
© EKF
ekf.com
Simplified Block Diagram
SPY-RIG
WWAN Module Carrier
ANT MAIN
AUX
Mini SIM
Front Panel I/O
MAIN
Option AUX
M.2 WWAN
3042-S3-B Socket 2
(3G/4G/LTE Modem)
5.80H
USB2
USB3
SIM
SEPS 8 Way
SEPS-8-272+
W.FL
2x2mm
Option 7 x EP2W+
Micro SIM
HE910
UMTS | HSPA+
USB
PCIe to USB
7340
PCIe
PCIe Switch
PEX8605
PCI Express
P6
Backplane CompactPCI Serial
Peripheral Slot
P1
shown here is the default SIM card socket assignment
front/on-board sockets may be swapped via I2C